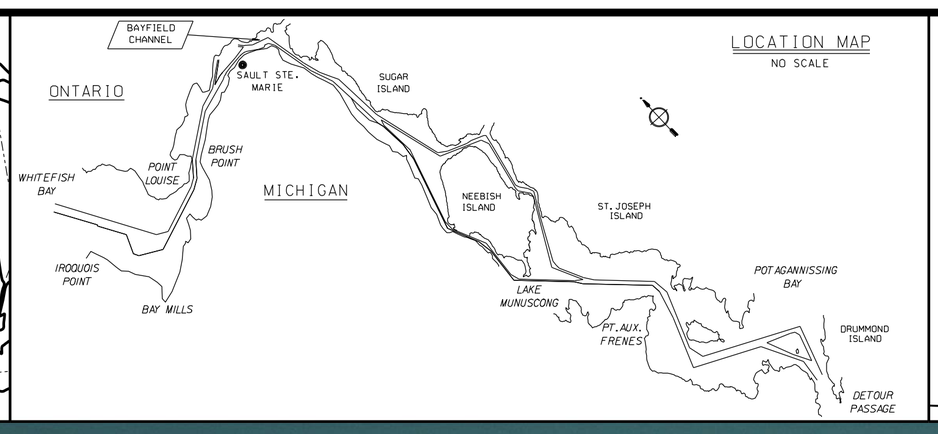

LOCATION MAP
NO SCALE

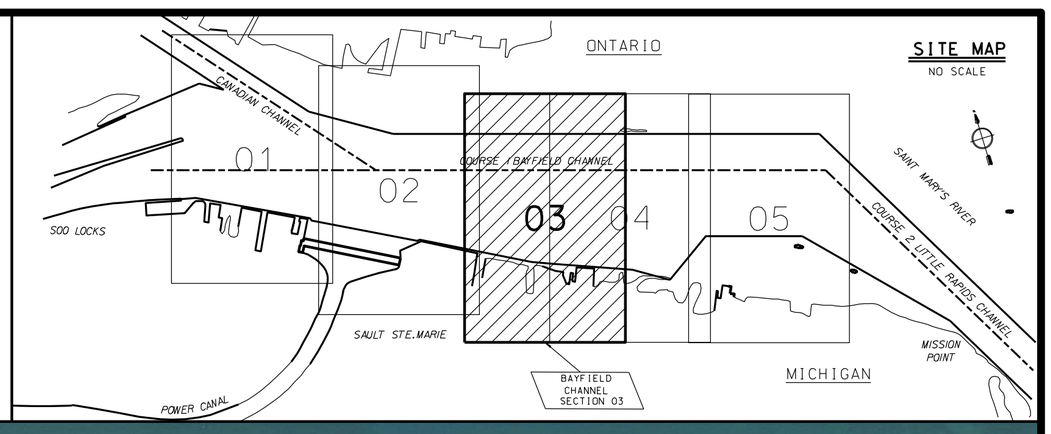

SITE MAP
NO SCALE

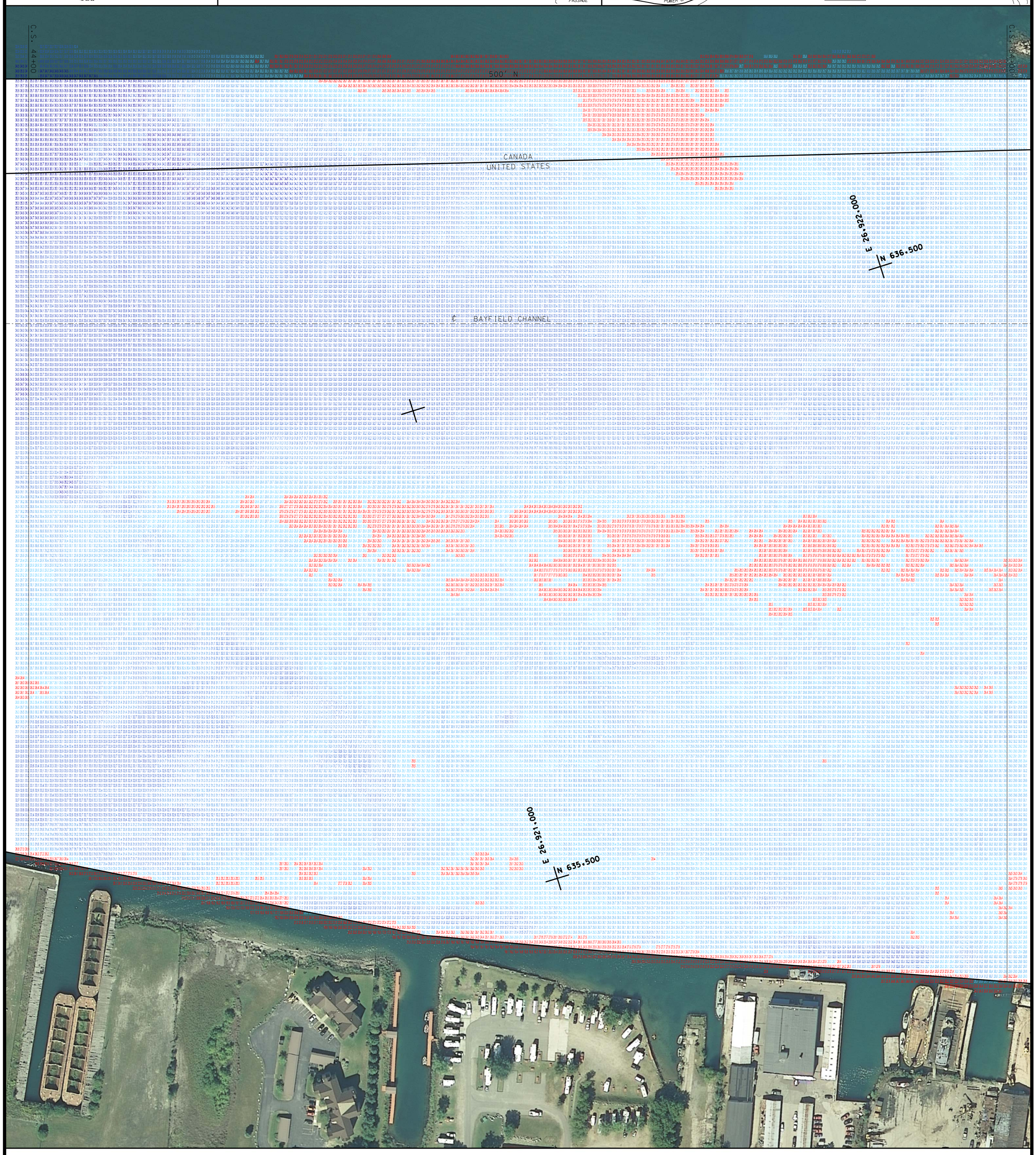

NOTES

1. THE SOUNDINGS INDICATED HEREON REPRESENT THE MINIMUM DEPTH FOUND IN THE 10 FOOT BY 10 FOOT AREA CENTERED AROUND THE TEXT. MINIMUM DEPTH DATA IS PRODUCED FOR STRIKE/SHOAL REMOVAL OPERATIONS AND NOTICES TO NAVIGATION INTERESTS.
2. ELEVATIONS AND SOUNDING DEPTHS ARE REFERRED TO INTERNATIONAL GREAT LAKES DATUM 1955 (IGLD 55). LOW WATER DATUM ZERO IS 577.7 FEET ABOVE MEAN WATER LEVEL AT FATHER POINT QUEBEC. WATER LEVEL READINGS ARE FROM AN AUTOMATED GAUGE LOCATED AT THE USACE BOATHOUSE. DEPTHS ARE MEASURED USING AN R2SONIC 2024 MULTIBEAM SONAR.
3. THE INFORMATION DEPICTED ON THIS MAP REPRESENTS THE RESULTS OF SURVEYS MADE ON NOVEMBER 9, 2015 AND CAN ONLY BE CONSIDERED AS INDICATING THE GENERAL CONDITIONS PRESENT AT THE TIME.
4. THE LOCATION OF NAVIGATION AIDS REPRESENT THEIR GENERAL LOCATION AND CANNOT BE CONSIDERED FOR NAVIGATION.
4. HORIZONTAL POSITIONING IS DETERMINED USING THE DIFFERENTIAL GLOBAL POSITIONING SYSTEM (DGPS). THE DIFFERENTIAL CORRECTIONS ARE PROVIDED BY U.S. COAST GUARD DIFFERENTIAL BROADCAST STATIONS. SIGNAL STRENGTH IS USED AS THE DETERMINING FACTOR IN DIFFERENTIAL SELECTION. THE DGPS RECEIVER IS MANUFACTURED BY APPLANIX MARINE POS/MV VER 4.0
5. GRID COORDINATES ARE BASED ON THE MICHIGAN STATE PLANE COORDINATE SYSTEM, LAMBERT PROJECTION, MICHIGAN NORTH ZONE (2111), NORTH AMERICAN DATUM 1983 (NAD83). ALL COORDINATES SHOWN ARE IN U.S. SURVEY FEET. CROSS SECTIONS AND RANGES ARE REFERRED TO COURSE 1 BAYFIELD CHANNEL.
6. UNLESS OTHERWISE NOTED PROJECT DEPTH IS 28.0' BELOW LOW WATER DATUM.

LEGEND

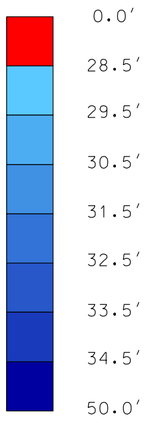

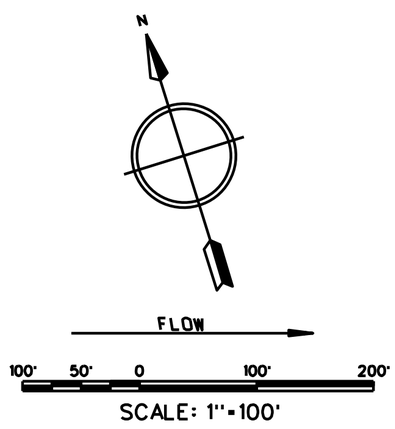

Sheet reference number: BC1-03
Sheet 03 of 05

SOO AREA OFFICE
SAINT MARY'S RIVER
FEDERAL NAVIGATION CHANNEL

COURSE 1 BAYFIELD CHANNEL
SURVEY SECTION 03
C.S. 44+00 to C.S. 64+00
CONDITION SURVEY

U.S. ARMY ENGINEER DISTRICT CORPS OF ENGINEERS DETROIT, MICHIGAN	Surveyed by: J. Mrozek	Survey Date: Nov. 9, 2015	Rev.
	Dwn by: J.S.M. / Ckd by:	Design file name: Bc1v103c151.dgn	
Approval Recommended: Area Eng. Soo Office	Reviewed by: Chief, Fac. Mgmt.	Drawing code:	
Approved by: District Engineer:	Submitted by: Chief, SMR Section	File name: Plot date: 11-10-15 Plot scale: 1"=100'	

Symbol	Description	Date	Appr.	Symbol	Description	Date	Appr.

US Army Corps of Engineers
Detroit District