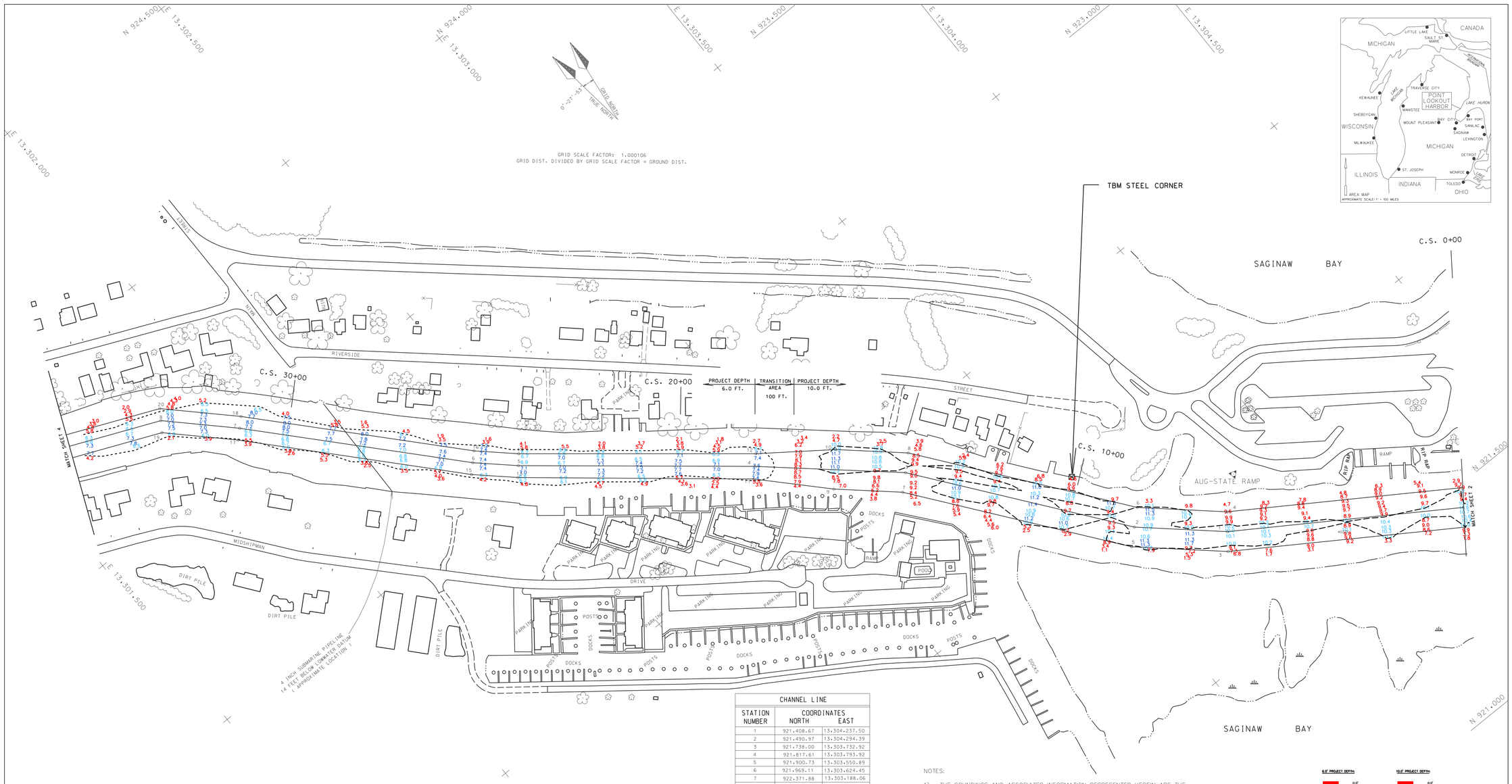

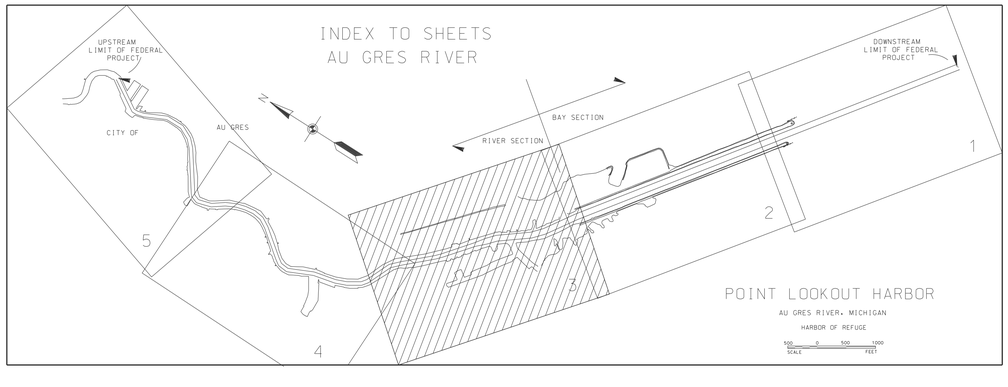

CHANNEL LINE		
STATION NUMBER	COORDINATES NORTH	EAST
1	921,408.67	13,304,237.50
2	921,490.97	13,304,294.39
3	921,738.00	13,303,732.92
4	921,817.61	13,303,793.92
5	921,900.73	13,303,550.89
6	921,969.11	13,303,624.45
7	922,371.88	13,303,188.06
8	922,440.04	13,303,261.56
9	922,487.52	13,303,057.93
10	922,562.14	13,303,124.44
11	922,634.44	13,302,916.93
12	922,681.13	13,302,960.69
13	923,012.73	13,302,455.77
14	923,058.14	13,302,495.03
15	923,092.37	13,302,369.45
16	923,134.80	13,302,411.97
17	923,531.12	13,301,966.04
18	923,572.84	13,302,009.20
19	923,666.94	13,301,827.99
20	923,717.58	13,301,862.08

CENTERLINE		
STATION NUMBER	COORDINATES NORTH	EAST
0	921,449.83	13,304,265.94
1	921,777.81	13,303,763.41
2	921,934.92	13,303,587.67
3	922,405.80	13,303,224.81
4	922,657.78	13,302,938.81
5	923,035.43	13,302,475.40
6	923,113.58	13,302,390.71
7	923,551.98	13,301,987.62
8	923,692.26	13,301,845.03

HORIZONTAL GROUND CONTROL		
STATION NUMBER	COORDINATES NORTH	EAST
AUG-STATE-RAMP	921,881.58	13,303,866.46

NOTES:

1) THE SOUNDINGS AND ASSOCIATED INFORMATION REPRESENTED HEREIN ARE THE RESULT OF SURVEYS MADE ON THE DATE AS INDICATED AND CAN ONLY BE CONSIDERED REPRESENTATIVE OF THE GENERAL CONDITIONS EXISTING AT THE TIME OF SURVEY.

2) THE SOUNDINGS DEPICTED HEREIN ARE EXPRESSED IN U.S. SURVEY FEET AND TENTHS THEREOF AND ARE REFERENCED TO THE FOLLOWING DATUMS:
   HORIZONTAL: MICHIGAN STATE PLANE COORDINATE SYSTEM, MICHIGAN SOUTH ZONE #2113, NORTH AMERICAN DATUM (NAD) OF 1983.
   VERTICAL: INTERNATIONAL GREAT LAKES DATUM (IGLD) OF 1985.

3) THE ABOVE SURVEY WAS CONDUCTED USING THE U.S.A.C.E. SURVEY VESSEL SKIFF EMPLOYING THE FOLLOWING COMPONENTS:
   POSITIONING: TRIMBLE DSM
   MOTION COMPENSATION: N/A
   SONAR: ODOM CV-100 (SINGLEBEAM)
   SOFTWARE: HYPACK 2013

4) TIDE CORRECTION VALUES REFERENCED FROM A PAINT MARK ON SEAWALL DESCRIBED AS "TBM STEEL CORNER," LOCATED ON TOP OF STEEL WALL AND AT DOWNSTREAM END OF WALL (SHEET 3). ELEVATION IGLD 85 = 582.18.

LAKE HURON L.W.D. = 577.50

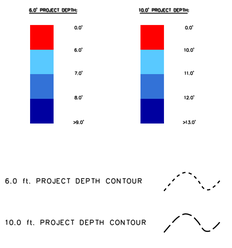

US ARMY CORPS OF ENGINEERS DETROIT DISTRICT

UNITED STATES ARMY CORPS OF ENGINEERS
DETROIT AREA OFFICE, DETROIT, MICHIGAN

CONDITION SURVEY
POINT LOOKOUT, MI
CS 00+00 TO CS 35+00N

DRAWN BY: B.R.
CHECKED BY: C.V.L.
DATE OF SURVEY: 10 AUG 2016

100' 0' 100' 200'
SCALE 1" = 100'

SHEET 3 OF 5